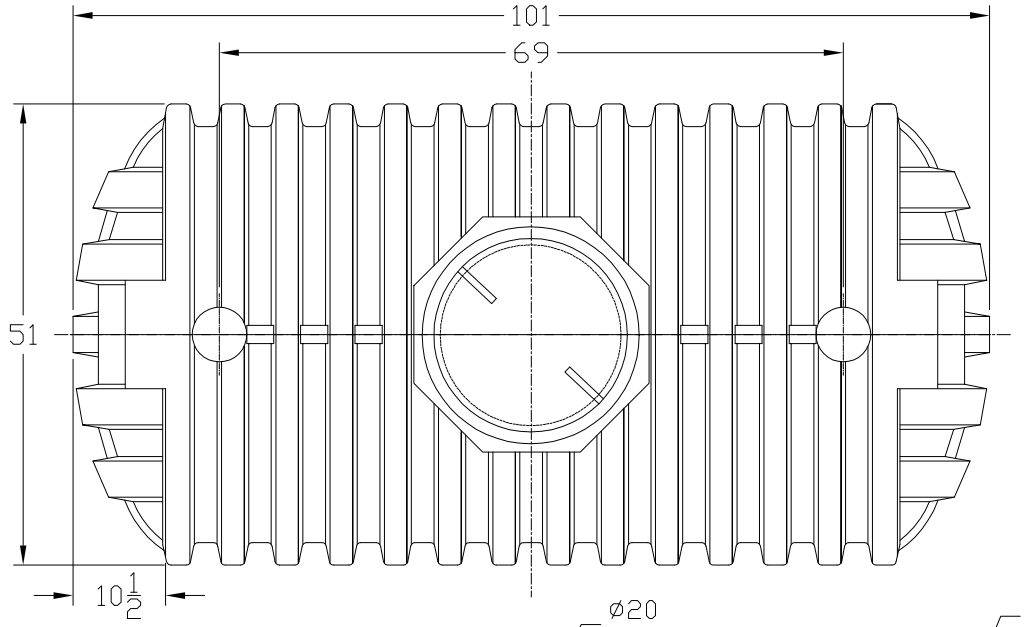

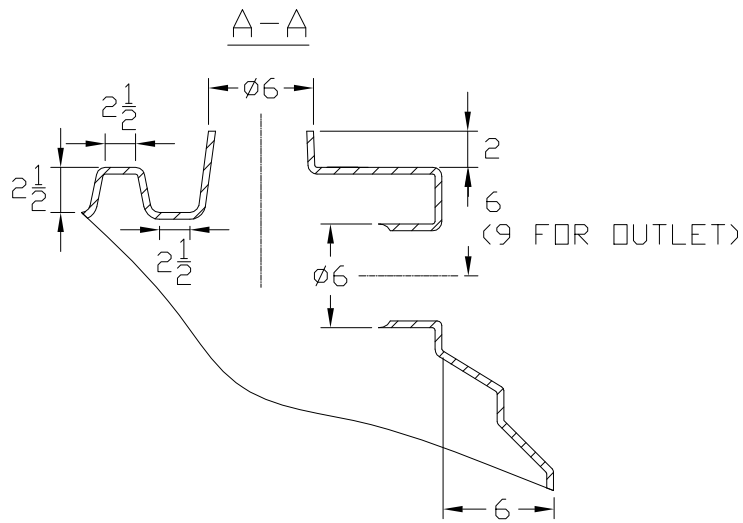

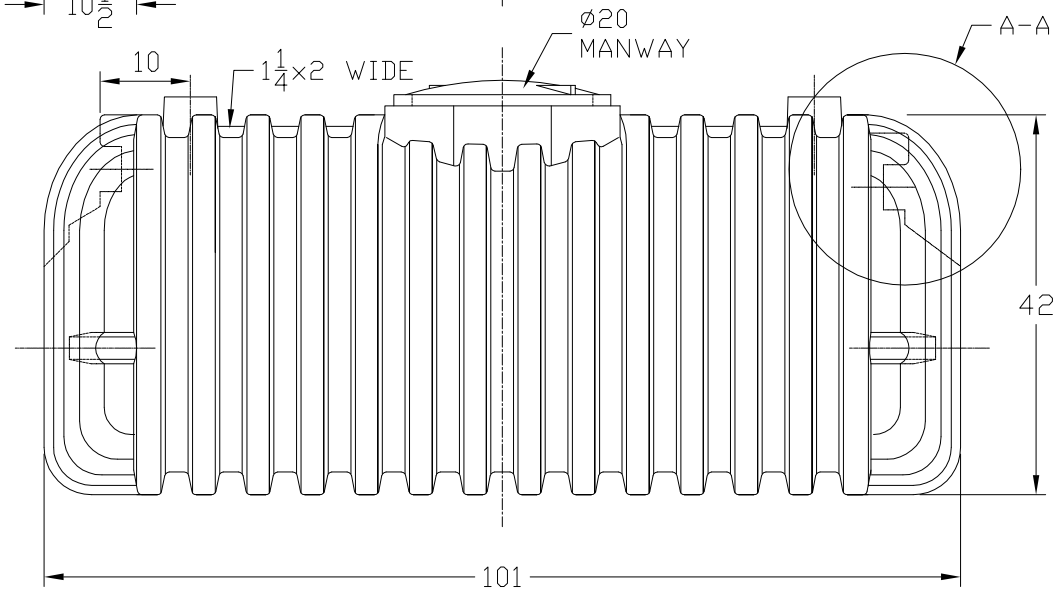

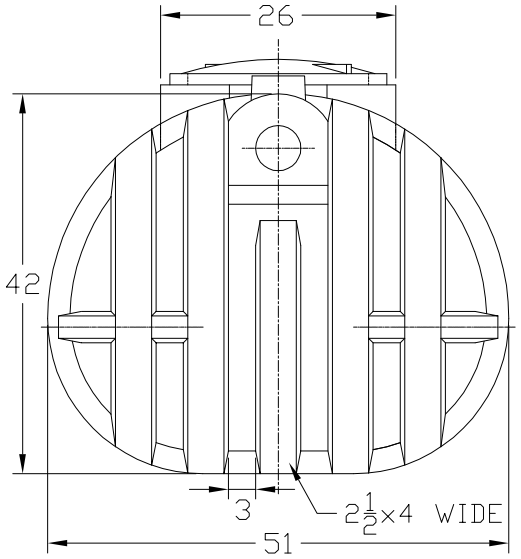

Rev. 0	Date 02/23/01	File Name ST500X-N	
CHEM-TAINER Industries Inc. 361 Neptune Ave. W.Babylon, NY 11704 (631) 661-8300 Fax: (631) 661-8209		Date 02/23/01	Mold Location Tn
		Drawn By: IIA	Cust. Rep.
TITLE 500 GAL. BELOW GROUND SEPTIC TANK			
Part # TN500XST		Dwg. # C-500X-1N	

THIS DRAWING & DESIGN IS
THE PROPERTY OF CHEM-TAINER INDUSTRIES INC.
IT MAY NOT BE USED FOR ANY PURPOSE
OTHER THAN BY THE OWNER. CHEM-TAINER DOES NOT
AUTHORIZE THE REPRODUCTION OR CONVEYANCE
OF ANY INFORMATION CONTAINED HEREIN.

ALL DIMENSIONS SHOWN ARE OUTSIDE PART DIMENSIONS IN INCHES, AND VARY BY THE STANDARD ROTATIONAL MOLDING TOLERANCE OF +2;-3%.